QDSP-5005

Fanless Box PC w/ Intel® Celeron® Dual Core Processor

- Intel® Celeron® Dual Core Processor
- Intel® HM76 Express Chipset
- 2x DDR3 1333/1600 MHz memory support up to 16 GB
- 1x HDMI, 2x DP, 1x S/PDIF Output and Clear CMOS
- 2x USB2.0, 4x USB3.0, 2x COM, 2x GbE LAN and Audio
- 1x mSATA, 2x Mini-PCIe slots
- Triple-independent display /Dual storage
- Fanless design

Quanmax

Product Overview

The QDSP-5005 is a fanless Box PC ideal for space critical applications. This embedded hardware platform features Intel® Celeron® Dual Core Processor, Intel® HM76 Express chipset, and DDR3 1333/1600 SO-DIMM. It comes with 2.5" SSD, mSATA, 2x Mini-PCIe slots, HDMI, 2x DP, 2x USB2.0, 4x USB3.0, 2x COM, 2x GbE LAN, and Audio.

The QDSP-5005 provides triple-independent display and dual storage, high reliability rugged case not only for great protection from EMI, cold and heat, but also integrated with passive cooling design for quiet fanless operation such as Digital Signage.

Technical Information

CPU Support

Intel® Celeron® Dual Core Processor

Chipset

Intel® HM76 Express Chipset

Memory

2x Single Channel DDR3 1333/1600MHz SODIMM support (16 GB max)

BIOS

AMI Plug & Play SPI BIOS

I/Os

Front I/O
- Realtek ALC662 HD Codec w/ 2W Audio Amplifier, Mic-In, Line-In, Line-Out
- 1x S/PDIF Output
- 1x eSATA and USB 2.0 combo supported
- 2x USB 2.0
- 2x USB 3.0
- 1x Power Button with Power LED
- 1x Storage HDD status LED (RED)
- 1x Wifi /3G status LED (Green)
- 1x Clear CMOS

Rear I/O
- 1x DC JACK
- 1x HDMI
- 2x DP
- 2x RJ-45 GbE ports (Realtek RTL8111E/ Intel 82579)PXE / WOL supported
- 2x USB 3.0
- 2x COM Ports support RS-232/422/485
- 2x WiFi External Antennas (optional)
- 1x 3G External Antenna (optional)

Storage

- 1x 2.5" SSD
- 1x eSATA and USB 2.0 combo connector
- 1x mSATA

Expansion slot

2x Mini-PCIe slots (SIM Card socket supported)

Hardware Monitor

Operating voltage, CPU temperature

Watchdog Timer

1-255 step, can be set with software on Super I/O

Power

DC 19V Input

OS Support

Windows 7/ Windows 8 / Linux

Dimensions

220 x 153.3 x 38 mm (W x D x H)

Temperature / Humidity

Operating: 0°C to 50°C, 0%-90%, non-condensing
Storage: -20°C to 80°C, 0%-90%, non-condensing

Certifications

CE, FCC Class A

QDSP-5005 I/Os

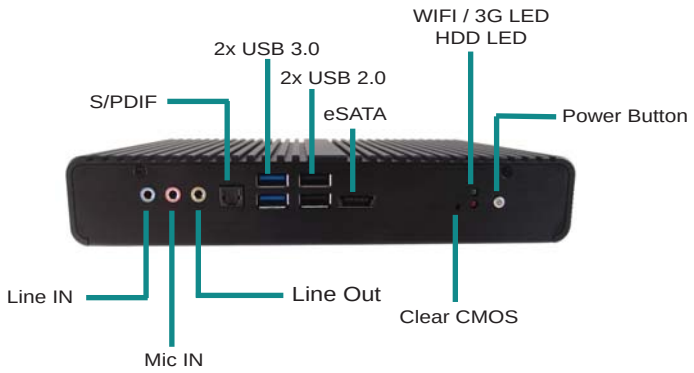

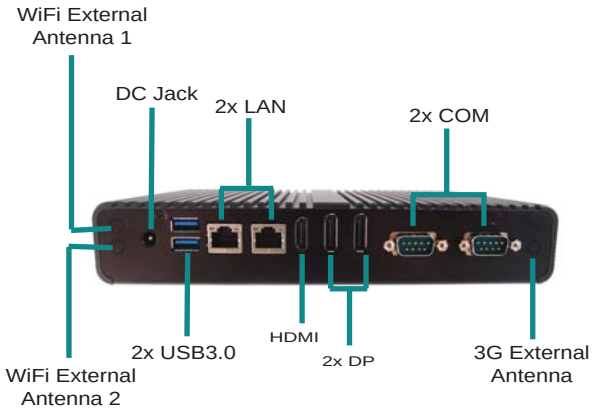

5F, No. 415, Ti-Ding Blvd. Sec. 2, NeiHu District, Taipei, Taiwan 114
T +886-2-2799-2789 F +886-2-2799-7399 sales@quanmax.com
www.quanmax.com

Quanmax

Ordering Information

Article	Description
QDSP-5005	Fanless Box PC, Intel® Celeron® Processor 1047UE +HM76, 2x DDR3 SODIMM, 2 x GbE LANs, 2x DP, 1x HDMI, 4x USB3.0, 2x USB2.0, 1x eSATA, 2x COM, 1x 2.5" SSD /HDD and S/PDIF

5F, No. 415, Ti-Ding Blvd. Sec. 2, NeiHu District, Taipei, Taiwan 114
T +886-2-2799-2789 F +886-2-2799-7399 sales@quanmax.com
www.quanmax.com