OPS-2050 Series

Preliminary

Open Pluggable Specification (OPS) Compliant
Digital Signage Player
with 6th Generation Intel® Skylake-H Processor

- 6th Generation Intel® Skylake-H Processor
- Intel® QM170 / HM170 Express Chipset
- Intel® HD Graphics 530 integrated
- 2 x DDR4 SO-DIMM up to 32GB
- 2x HDMI2.0 (1x on front), 2 x DP (1x on front) for video output
- 6x USB3.0 (4x on front), 2x USB2.0 for peripheral connection
- 2x LAN on front for wired network connection
- 1x M.2 Key A, 1x M.2 Key B, 1x microSIM holder for storge & wireless expansion
- 1x slim type 2.5" SATA HDD / SSD slot on front for storage
- Wide voltage range power input: 12V ~ 19V

Quanmax

Product Overview

OPS-2050 Series is an OPS-Compliant media player for digital signage application. This embedded hardware platform boasts the 6th Generation Intel® Skylake-H processor, integrated with Intel® HD Graphics 530 GPU and therefore it is stunning by greatly enhanced graphics performance and energy efficiency to respond to the requirements for the state-of-the-art applications.

Another distinguishing feature is that OPS-2050 Series is equipped with the latest-version HDMI 2.0 port with 4K resolution, higher data rate, wider bandwidth, ultra-wide display support and can satisfy increasing requirements for high definition and large screen size.

Technical Information

CPU Support	
	OPS-2051: Intel® Core™ i7-6820HQ (Quad Core, 8M Cache, up to 3.60 GHz, FCBGA1440, 45W TDP)
	OPS-2052: Intel® Core™ i7-6700HQ (Quad Core, 6M Cache, up to 3.50 GHz, FCBGA1440, 45W TDP)
	OPS-2053: Intel® Core™ i5-6440HQ (Quad Core, 6M Cache, up to 3.50 GHz, FCBGA1440, 45W TDP)
Chipset	
	Intel® QM170 (OPS-2051/2053)
	Intel® HM170 (OPS-2052)
Memory	
	2x DDR4 2133 SO-DIMM up to 32GB
Graphic Controller	
	Intel® HD Graphics 530
Display Interfaces	
	2x HDMI2.0 (1x on front, 1x by JAE, 3840 x 2160 @ 60Hz)
	2x DP (1x on front, 1x by JAE, 4096 x 2304 @ 60Hz)
Multiple Display	
	Triple (only one output supported between 2 on-front ports)
Audio Chipset	
	Realtek ALC662
Audio Interfaces	
	1x Line-in/Line-out/Mic-in (on front)
	1x Line-out (by JAE)
Ethernet	
	2x LAN (RJ-45 on front, 1x Intel® I219, 1x Intel® I210)
USB	
	6x USB3.0 (4x Type A on front, 2x by JAE)
	2x USB2.0 (by JAE)
Other I/Os	
	1x UART (by JAE)
Storage & Expansion	
	1x 2.5" SATA HDD / SSD (Slim type slot on front)
	1x M.2 Key A slot (defatult Wi-Fi module)
	1x M.2 Key B slot (default for Storage / 3G / 4G module)
	1x microSIM card holder

Power Supply	
	Connector: DC Jack (on rear)
	Input Voltage: DC 12V ~ 19V
Firmware	
	BIOS: AMI uEFI BIOS w/ 128Mb SPI Flash
	Watchdog: Programmable WDT to generate system reset event
	H/W Monitor: Voltages, Temperatures
	Real Time Clock: Chipset integrated RTC
	TPM: Optional
	iAMT: Only for OPS-2051/2053
System Control & Monitoring	
	1x Power Botton w/ LED (on front)
	1x Reset Button (on front)
	1x Storage LED (on front)
	1x Wireless LED (on front)
Cooling	
	1x CPU Smart Fan
	1x System Smart Fan (by JAE)
OS Support	
	Windows 7, Windows 8, Windows 10, Linux
Construction	
	Metal Chassis
Dimensions (W x D x H)	
	200 x 119 x 30 mm / 7.87" x 4.69" x 1.18"
Weight	
	1000 g / 2.20 lb
Environmental Characteristics	
	Operation Temp.: 0°C ~ 45°C / 32°F ~ 113°F
	Storage Temp.: -20°C ~ 80°C / -4°F ~ 176°F
	Humidity: 0% ~ 90%
Mounting	
	Insertion
Certification	
	CE, FCC Class A

OPS-2050 Series I/Os

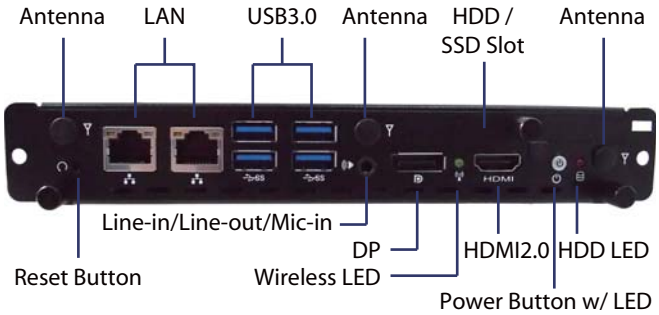

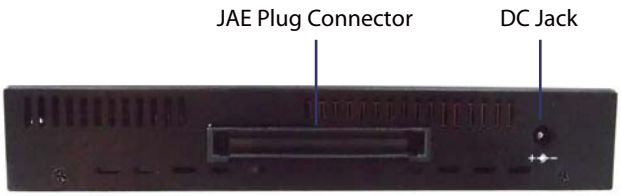

5F, No. 415, Ti-Ding Blvd. Sec. 2, NeiHu District, Taipei, Taiwan 114
T +886-2-2799-2789 F +886-2-2799-7399 sales@quanmax.com
www.quanmax.com

Ordering Information

Article	Part No.	Description
OPS-2051	SOPS205100010T00	Intel® Core™ i7-6820HQ, Intel® QM170, 2x DDR4 SO-DIMM, 2x HDMI2.0, 2x DP, 2x LAN, 6x USB3.0, 2x USB2.0, 1x M.2 Key A, 1x M.2 Key B, 1x MicroSIM, w/ iAMT
OPS-2052	SOPS205200010T00	Intel® Core™ i7-6700HQ, Intel® HM170, 2x DDR4 SO-DIMM, 2x HDMI2.0, 2x DP, 2x LAN, 6x USB3.0, 2x USB2.0, 1x M.2 Key A, 1x M.2 Key B, 1x MicroSIM, w/o iAMT
OPS-2053	SOPS205300010T00	Intel® Core™ i5-6440HQ, Intel® QM170, 2x DDR4 SO-DIMM, 2x HDMI2.0, 2x DP, 2x LAN, 6x USB3.0, 2x USB2.0, 1x M.2 Key A, 1x M.2 Key B, 1x MicroSIM, w/ iAMT

5F, No. 415, Ti-Ding Blvd. Sec. 2, NeiHu District, Taipei, Taiwan 114
T +886-2-2799-2789 F +886-2-2799-7399 sales@quanmax.com
www.quanmax.com