KEEX-0200T

Extreme Temperature Qseven® Module
with NXP® i.MX6 Cortex-A9™ Processor

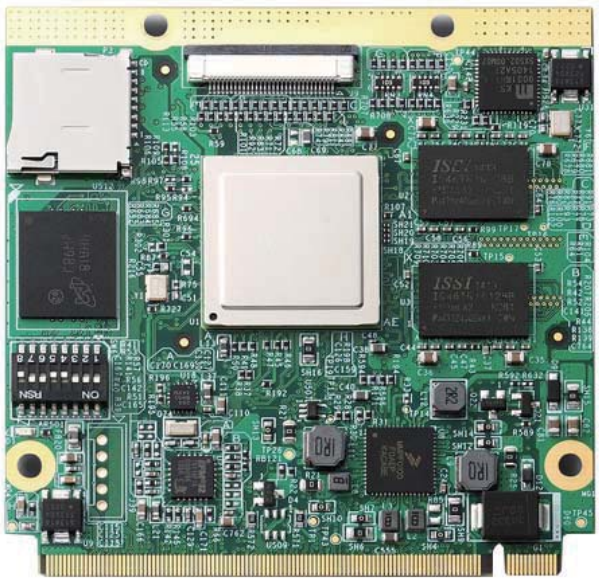

- NXP® i.MX6 Cortex-A9™ Dual Lite / Dual / Quad Cores
- 1GB DDR3 Memory
- 4GB eMMC NAND Flash
- 1x Micro SD Socket, 1x TTL Connector, 1x 3-asix Accelerometer
- 2x 1/2 channel LVDS, 1x HDMI
- 1x SATA, 1x SDIO
- 1x GbE, 1x USB 2.0 Host, 1x USB 2.0 OTG
- 1x PCIex1
- Android / Embedded Linux OS Support
- Extreme operating temperature range: -40°C ~ 85°C

Quanmax

Block Diagram

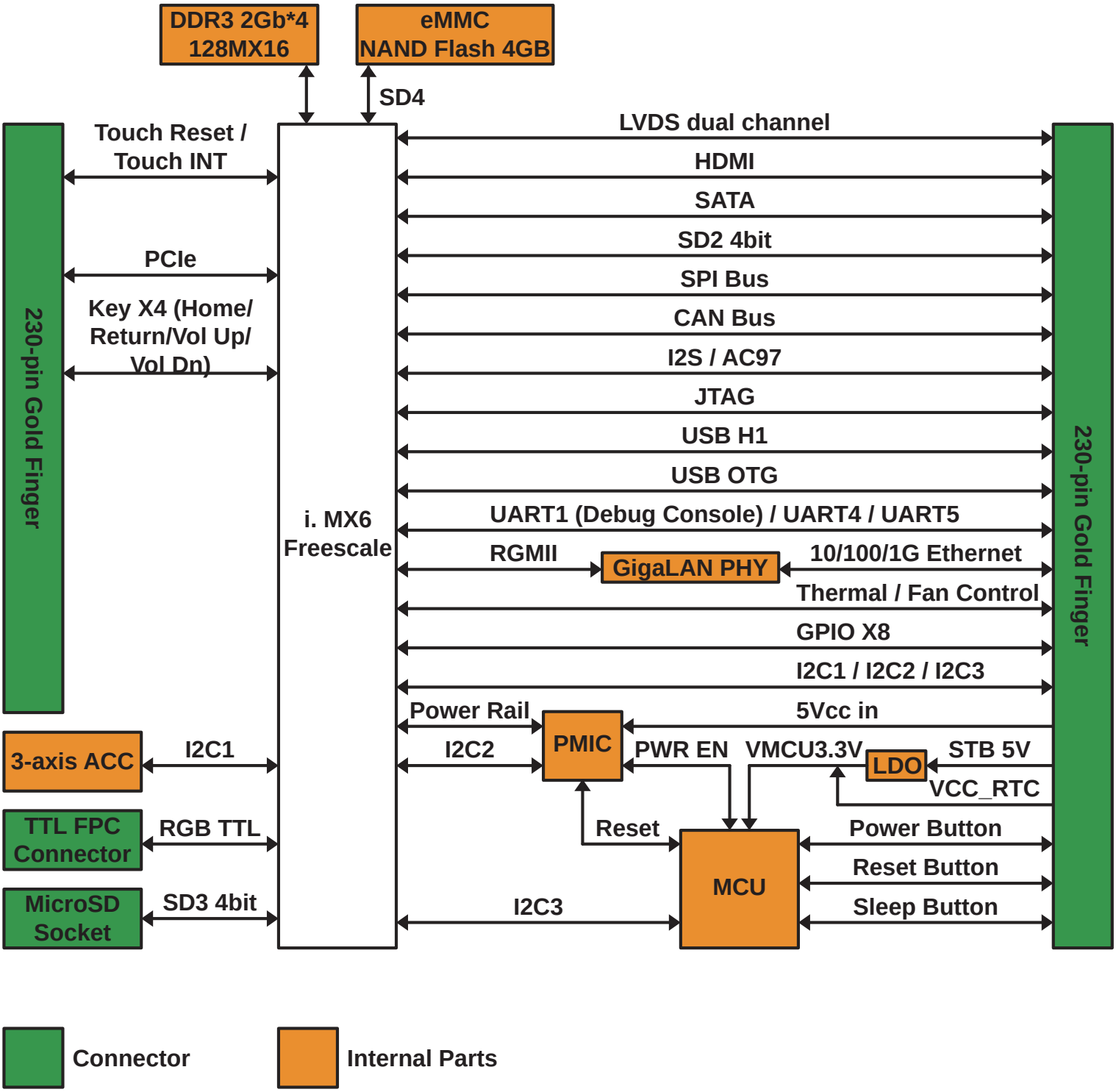

5F, No. 415, Ti-Ding Blvd. Sec. 2, NeiHu District, Taipei, Taiwan 114
T +886-2-2799-2789 F +886-2-2799-7399 sales@quanmax.com
www.quanmax.com

Quanmax

Technical Information

Processor	
	NXP® ARM® Cortex-A9 Core i.MX 6 Dual Lite/ Dual/ Quad Automotive (Dual / Quad Core, 512K / 1M Cache, 1 GHz)
Memory	
	1GB DDR3 1067 memory onboard (Dual / Quad)
	1GB DDR3 800 memory onboard (DualLite)
Display Interfaces	
	2x LVDS (18/24-bit, 1/2-ch, via Gold Finger)
	1x HDMI (1920 x 1080, via Gold Finger)
Audio Chipset	
	NXP® SGTL5000
Audio Interfaces	
	1x I2S / AC97 Bus (via Gold Finger)
Ethernet	
	1x LAN (via Gold Finger)
USB	
	1x USB 2.0 Host (via Gold Finger)
	1x USB 2.0 OTG (via Gold Finger)
Other I/Os	
	1x SDIO (via Gold Finger)
	1x SPI Bus (via Gold Finger)
	1x CAN Bus (via Gold Finger)
	3x I2C Bus (via Gold Finger)
	1x JTAG (via Gold Finger)
	3x UART (via Gold Finger)
	1x 3-asix Accelerometer
	1x TTL Connector (RGB24bits)

Storage & Expansion	
	4GB eMMC NAND Flash onboard
	1x SATA (via Gold Finger)
	1x Micro SD Cage
	1x PClex1 (via Gold Finger)
Power Supply	
	Input Voltage: DC 5V (via Gold Finger)
System Control & Monitoring	
	Power button (via Gold Finger)
	Reset button (via Gold Finger)
	Sleep button (via Gold Finger)
	Home button (via Gold Finger)
	Return button (via Gold Finger)
	Volume Up button (via Gold Finger)
	Volume Down button (via Gold Finger)
Cooling	
	Thermal / FAN Control (via Gold Finger)
OS Support	
	Android 4.2.2 / Embedded Linux 3.0.35
Dimensions (L x W)	
	QSeven™ (70 x 70 mm / 2.76" x 2.76")
Environmental Characteristics	
	Operating Temperature: -40°C ~ 85°C / -40°F ~ 185°F
	Storage Temperature: -55°C ~ 85°C / -67°F ~ 185°F
	Humidity: 5% ~ 85%
Certification	
	CE, FCC Class A

KEEX-0200T I/Os

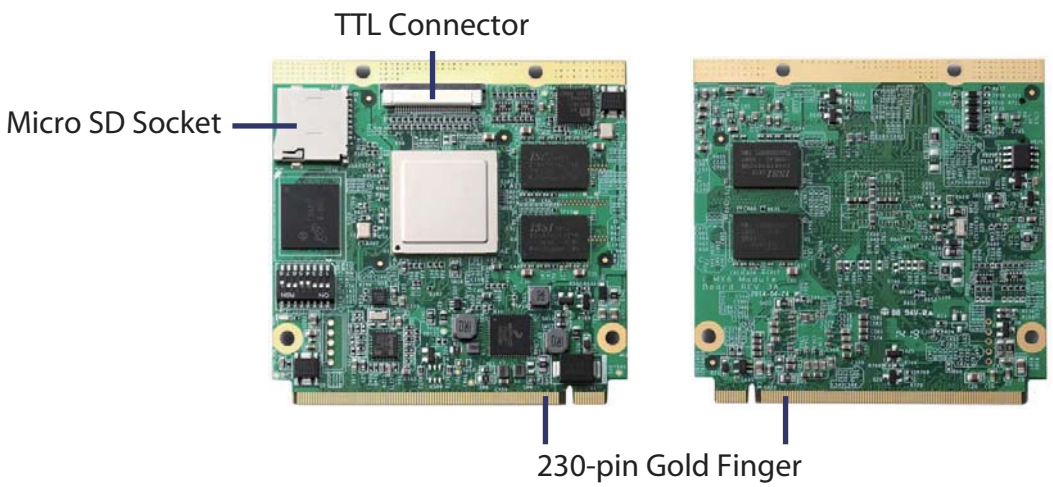

Ordering Information

Article	Part No.	Description
KEEX-0200T	B3EX020T-001000N	QSeven™ Form Factor, NXP® i.MX6 Cortex-A9™, 1GB DDR3 Memory, 4GB eMMC, 2x LVDS, 1x HDMI, 1x SATA, 1x SDIO, 1x GbE, -40°C ~ 85°C

5F, No. 415, Ti-Ding Blvd. Sec. 2, NeiHu District, Taipei, Taiwan 114
T +886-2-2799-2789 F +886-2-2799-7399 sales@quanmax.com
www.quanmax.com

Accessories

Article	Part No.	Description
CRRD-RQ70		QSeven™ Carrier Board Peripheral Device Support List: 1. LVDS panel (including cable) a. 1280x1024 24-bit 2CH (AUO G170ETN001) b. 1024x768 24-bit 1CH (AUO G150XTN001) 2. SPI device 3. WIFI module (mPCIE I/F) or 3G module (mPCIE I/F) a. Chicony C204E wifi module b. NaviSYS WW350-U 3G module 4. MicroSD 5. USB X 2 6. mini USB OTG 7. HDMI monitor 8. Speaker/Head phone 9. MIC-In 10. RS232 11. UART 12. LAN x 2

5F, No. 415, Ti-Ding Blvd. Sec. 2, NeiHu District, Taipei, Taiwan 114
T +886-2-2799-2789 F +886-2-2799-7399 sales@quanmax.com
www.quanmax.com